Douglas Lighting Controls Bluetooth® Switches

BT-4BTSW-A **BT-8BTSW-A** **BT-DMSW-A**

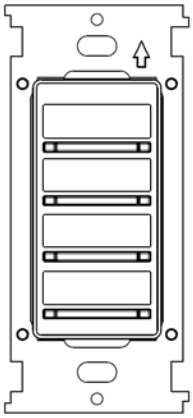

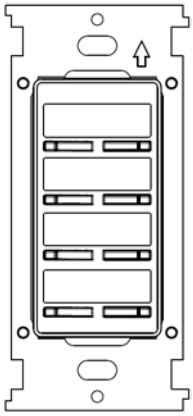

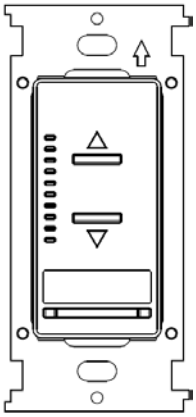

Installation Manual

***Patent Pending**

This page intentionally blank.

WARNING!

SYSTEM MUST BE INSTALLED IN ACCORDANCE WITH LOCAL AND NATIONAL ELECTRICAL CODES

For indoor installations.

Risk of Electric Shock. All servicing should be performed by qualified service personnel. To reduce the risks of electric shock disconnect power supplies before servicing.

SAVE THESE INSTRUCTIONS

- READ AND FOLLOW ALL SAFETY INSTRUCTIONS.
- Be aware that Line Voltage Connections may be 120Vac or 277Vac or 347Vac
- Do not install near gas or electric heaters.
- Equipment should be mounted in locations and at heights where it will not readily be subjected to tampering by unauthorized personnel.
- The use of accessory equipment not recommended by the manufacturer may cause an unsafe condition.
- Do not use this equipment for other than intended use
    - Wireless devices are only for lighting control
    - Wireless controls cannot be used with portable heating appliances

Table of Contents

1. INTRODUCTION 5

1.1. GENERAL DESCRIPTION 5

2. PART NUMBERS & NAMES 5

3. DESIGN FEATURES 6

4. SPECIFICATIONS 6

MOUNTING 6
POWER 6
OPERATING ENVIRONMENT 6
STORAGE TEMPERATURE 6
APPROVALS 6
NOTE: 6

5. DIMENSIONS 7

6. INSTALLATION FEATURES 7

7. INSTALLATION / WIRING / COMMISSIONING 8

1. INTRODUCTION

1.1. General Description

Douglas Lighting Controls **Bluetooth**® Wall Station Switches;

- BT-4BTSW-A (4-button switch)
- BT-8BTSW-A (8-button switch)
- BT-DMSW-A (dimmer & 1-button switch)

Provide ON/OFF, Dimming, and Scene control based on the device configuration and fixture wiring. The devices require a Douglas Lighting Controls Bluetooth Controller (BT-PP20-A) connected to the fixture(s).

Each switch is available in either a 120/277VAC or 347VAC model. The devices are capable of communicating with other Douglas Lighting Controls Bluetooth enabled devices (occupancy sensors, gateways, and controllers as part of the defined wireless eco-system) via the Bluetooth wireless network.

Commissioning is conveniently done at deck level with our free smartphone App using the Bluetooth functionality of the smartphone.

2. PART NUMBERS & NAMES

Part Number	Model
BT-4BTSW-U-A	DOUGLAS LIGHTING CONTROLS Bluetooth 4-Button Switch 120/277VAC
BT-4BTSW-3-A	DOUGLAS LIGHTING CONTROLS Bluetooth 4-Button Switch 347VAC
BT-8BTSW-U-A	DOUGLAS LIGHTING CONTROLS Bluetooth 8-Button Switch 120/277VAC
BT-8BTSW-3-A	DOUGLAS LIGHTING CONTROLS Bluetooth 8-Button Switch 347VAC
BT-DMSW-U-A	DOUGLAS LIGHTING CONTROLS Bluetooth Dimmer & 1-Button Switch 120/277VAC
BT-DMSW-3-A	DOUGLAS LIGHTING CONTROLS Bluetooth Dimmer & 1-Button Switch 347VAC

3. DESIGN FEATURES

- Standard single gang dimensions
- Tinned and stripped, colour coded wires
- Bluetooth wireless technology
- 120/277VAC models
- 347VAC models

4. SPECIFICATIONS

Mounting

- The device is designed to be mounted into the appropriately sized 120/277VAC or 347VAC wall station gang box

Power

- Line Voltage: 120/277VAC or 347VAC (device dependent)
- Frequency: 60Hz

Operating Environment

- Indoor, stationary, non-vibrating, non-corrosive atmosphere and non-condensing humidity

Operating Temperature

- 32°F to 104°F (0°C to 40°C)

Storage Temperature

- -14° to 140°F (-25° to 60°C)

Approvals

- Certified to CAN/CSA Std. C22.2 No. 14
- Conforms to UL 508 Standard
- FCC Class A
- ASHRAE 90.1 Compliant
- CEC Title 24 Compliant

Note:

- Contains IC: 8254A-B1010SP0
- Contains FCC ID: W7Z-B1010SP0

5. DIMENSIONS

120/277Vac

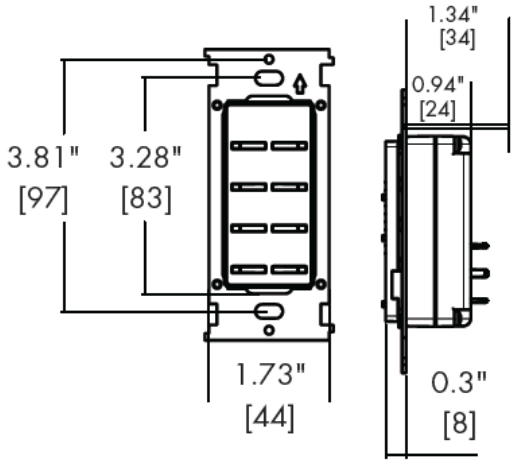

347Vac

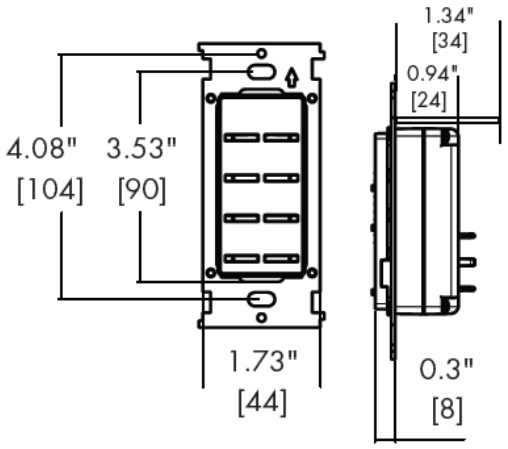

6. INSTALLATION FEATURES

- Tinned and stripped, colour coded wires (Black – Line, White – Neutral, Green – Ground)
- Mounts into listed standard wall station gang box
- Bluetooth enabled for wireless fixture control and wireless mesh networking
- Switches can be used with Decora style switch covers

7. INSTALLATION / WIRING / COMMISSIONING

⚠ CAUTION ⚠

Risk of Electric Shock. All servicing should be performed by qualified service personnel. To reduce the risks of electric shock disconnect power connections before servicing.

- For Installation with field-installed conductors of 60°C (140°F) minimum rating
- Mounts into the appropriately sized 120/277VAC or 347VAC wall station gang box – see dimension diagram
- Install device into position
- Connect wires as shown on diagram (14AWG)
- Download free smartphone Commissioning App
- Use Commissioning App to configure system

Side View

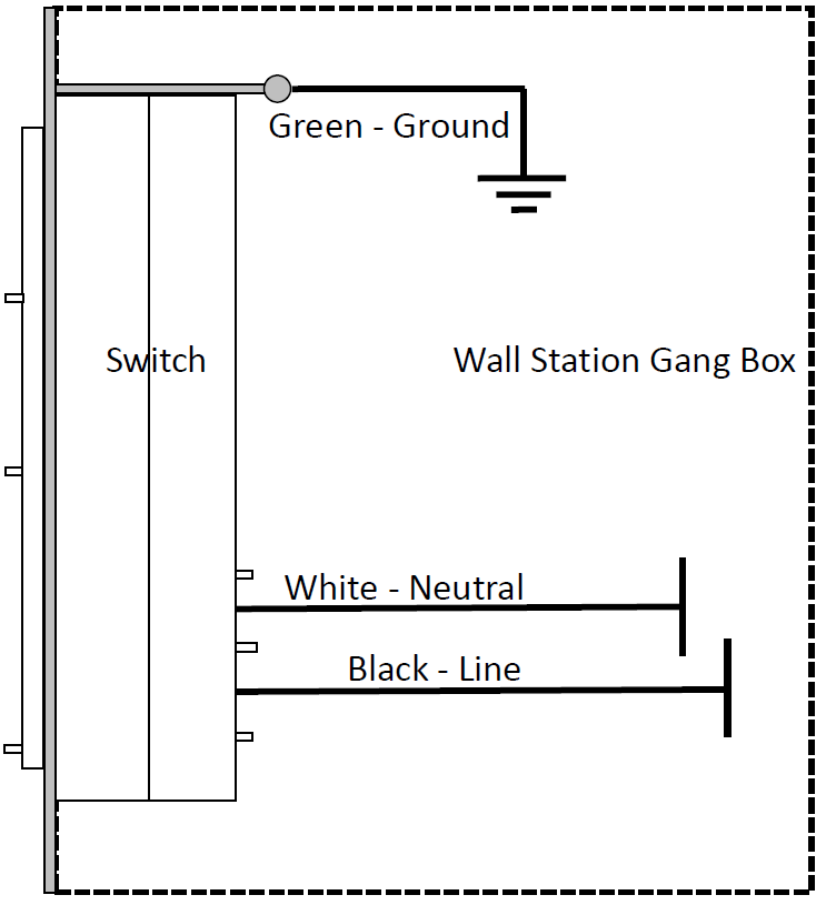

This page intentionally blank.

Douglas Lighting Controls
Burnaby, BC
Canada

Direct: 604-873-2797
Toll-Free: 877-873-2797
Email: lighting@douglaslightingcontrols.com
Website: www.douglaslightingcontrols.com

The *Bluetooth*® word mark and logos are registered trademarks owned by the Bluetooth SIG, Inc. and any use of such marks by Douglas Lighting Controls is under license. Other trademarks and trade names are those of their respective owners.